- Quality
- Value
- Service

Tech Reference

Hygienic Solutions at Work

Ready to Ship Stock Series Grab Bars

Code 1001 18":	1-1/4" dia. stainless steel, peened finish
Code 1001 24":	1-1/4" dia. stainless steel, peened finish
Code 1001 30":	1-1/4" dia. stainless steel, peened finish
Code 1001 36":	1-1/4" dia. stainless steel, peened finish
Code 1001 48":	1-1/4" dia. stainless steel, peened finish
Code 1003 30"x30":	1-1/4" dia. stainless steel, peened finish

All stock series grab bars are now available in white epoxy finish.

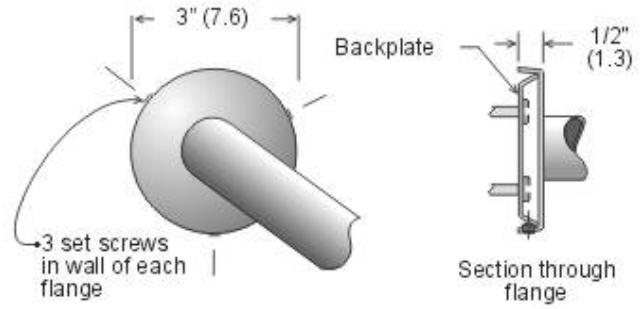

Concealed set screw mounting, suffix "DP" on codes

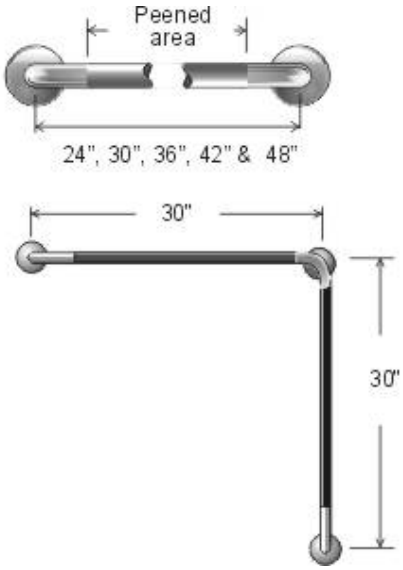

Specifications:

The Frost SP series stock grab bars are of an all stainless steel construction.
The brushed and peened finish make this an attractive cost effective product to specify for any installation. Stamped flange is 12 gauge stainless with a full 360 degree bead weld to the 18 gauge stainless tubing. Features concealed mounting detailing as shown in illustration above.

Barrier Free Access:

The Frost SP grab bar series comply with handicap codes requiring 1-1/4" to 1-1/2" bar diameter and wall clearance of 1-1/2".
Barrier free access specifications may vary depending on jurisdiction.

Description and specifications applicable on date issued. Frost reserves the right to make improvements or changes without notice.